Package, Reel, Taping

SC-70 (SOT-323)(3,000pcs/1reel)

• Package

Unit : mm

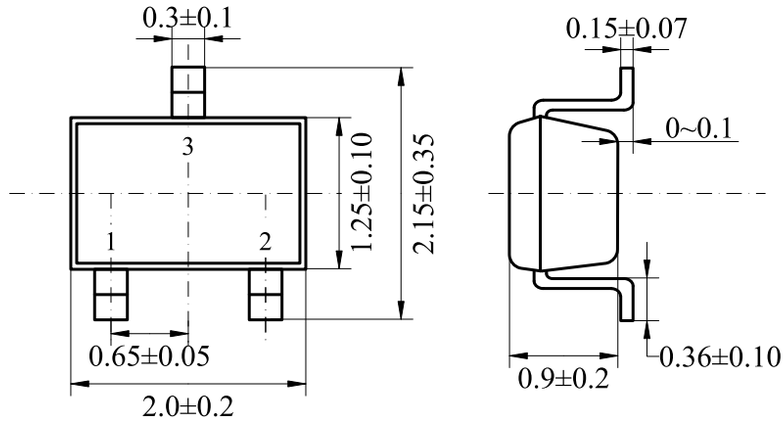

• Reel

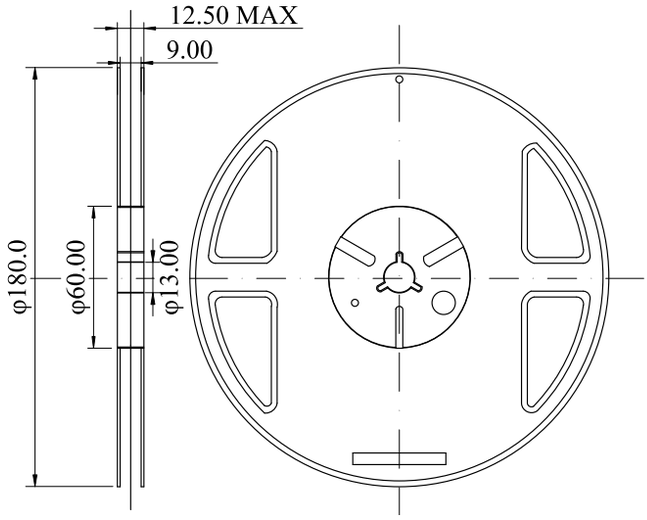

• Taping

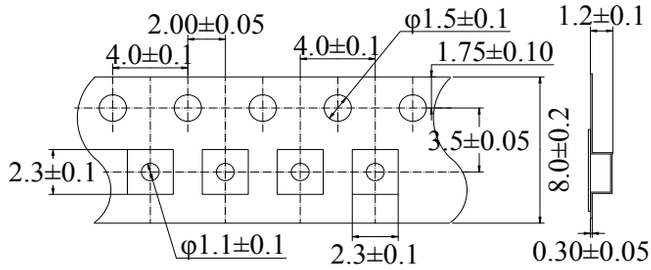

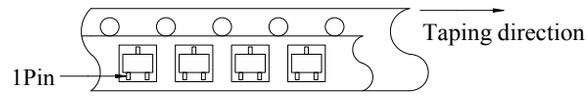
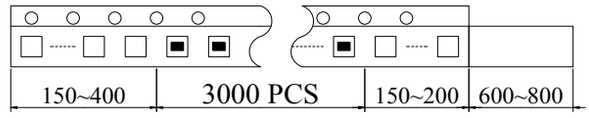
S type